APL90
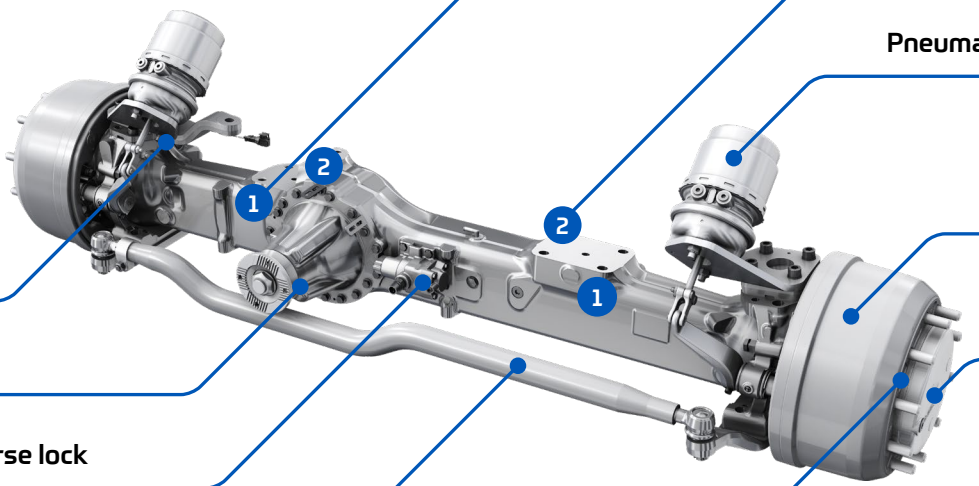
All-Wheel Drive Axle System for Off-Highway Applications