Industrial gearbox Redulus^{4F}

Power Packs For The Future

The flexible modular system of the Redulus^{4F} series offers the possibility to create over 2 000 gearbox combinations. Various market requirements were taken into account during the development of the Redulus^{4F} kit, so that it offers a solution for multiple customers in different industries.

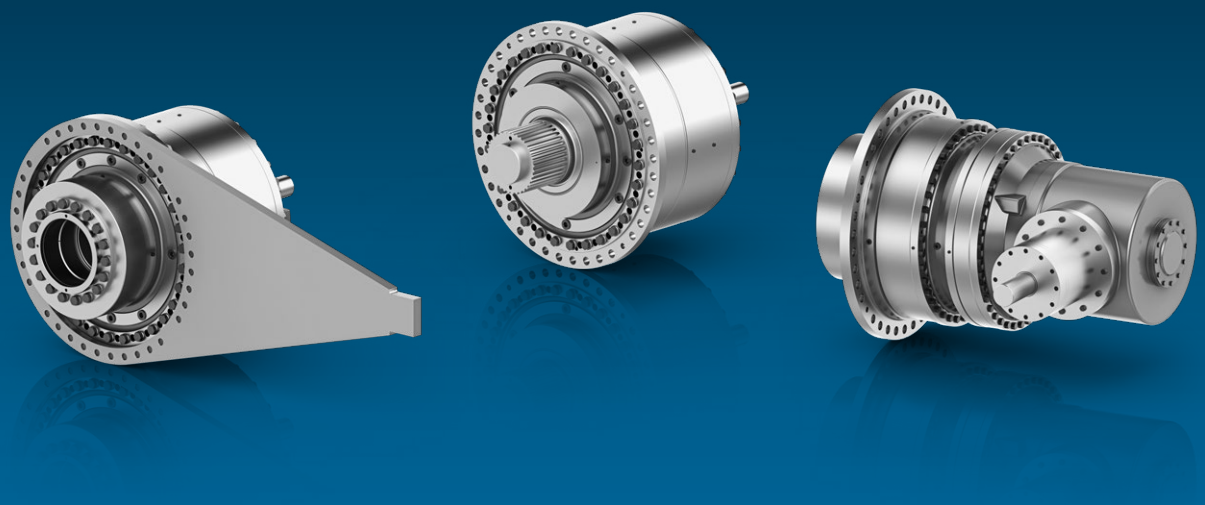

Features

- 2-stage planetary gearbox as basic modul
- Variable output designs hollow shaft, solid shaft with parallel key, male and female spline
- Flexible drive adaptations, optionally with coaxial, angular or spur gear pre-stages
- Maximum robustness and reliability under the toughest operating conditions
- Optimised sealing systems
- Balanced bearing concepts
- Optimised ease of maintenance
- Operating temperatures between -25° C and +40° C

Content

Description

ZF industrial gearboxes are reliable drive components that have proven their worth over many years and under a wide range of operating conditions. The next generation of ZF industrial transmissions, Redulus^{4F}, is also convincing in terms of robustness and efficiency.

Based on a newly developed modular system, they offer a significant increase in torque density of up to 40% as well as extended flexibility for the adaptation to required customer specifications.

In addition, the new ZF series offers numerous innovative solutions and a wide range of attachments to suit the customer-specific application.

The series is equipped with the ZF Condition Monitoring System ProVID, with the target of increased availability and service lifetime of the transmissions.

Our quality management according to DIN EN ISO 9001 2000 is the basis and guarantor for a consistently high level of quality. A team of development engineers, product managers and sales engineers ensures that customer requirements are quickly implemented in optimal technically and economically solutions. They are supported by the latest calculation programs for gear design and component optimisation.

The information in this catalogue will help you to carefully select the suitable planetary gear. In addition, our technical sales department will be happy to advise you at the project stage.

General information

Redulus^{4F} planetary gearboxes are characterized by a compact design and a particularly high mechanical efficiency.

Versions

The type code on page 5 gives an overview of the possible design variants.

Housing

The housings are made of cast iron as standard. The ring gears as housing components are made of heat-treatable steel. Other material qualities are available on request.

Variable output shaft

The version with shrink disc is included in the scope of delivery. The hollow shaft is mounted in the gearbox in such a way that it can absorb the weight of the gearbox and the reaction forces of a torque arm.

Drive side

For direct motor mounting, the drive shaft is designed as a sleeve with a corresponding inner profile to DIN 5480 to accommodate the motor shaft.

Seals

The input and output shafts are sealed by radial shaft seals as standard. They run on replaceable wear bushes. In case of increased dust accumulation, taconite seals are used which bind the dirt particles in a grease-lubricated labyrinth.

Mounting position

As a rule, the gearboxes can be used in all mounting positions. In order to guarantee sufficient lubrication, it is essential to specify the mounting position.

Bearing

The gears, planetary webs and shafts are supported exclusively by roller bearings.

Delivery

ZF Redulus^{4F} planetary gearboxes are delivered ready for installation, but without oil filling. As standard, the gearboxes are painted on the outside in RAL 5003 (sapphire blue). The internal preservation protects against corrosion for 24 months in dry storage. External flanges, shaft ends and connecting surfaces are surface-preserved.

Weights, oil quantities, dimensions

The weights and oil quantities stated are average values. The oil level control device is decisive for the oil quantity. Illustrations and dimensions are not strictly binding. We reserve the right to make changes in the course of further technical development.

Noise

The noise-optimised gear units can be assessed accordingly according to VDI 2159.

Toothing

Spur gears and planetary gears are straight-toothed, hardened in the set and correction-ground. Ring gears are highly hardened and nitrided. Bevel gears are case-hardened and ground or HPG-toothed.
The gear teeth are designed to be fatigue-proof for the specified continuous torques with the required safety.

Lubrication

The gearboxes have splash lubrication. Suitable additional lubrication measures are taken for inclined or vertical installation.

Cooling

Cooling is provided by the gearbox surface. Beyond that by additional air or water coolers. For vertical installation, please consult our technical sales department.

Other notes

All rotating parts must be provided with protection against accidental contact in accordance with the statutory regulations.

The valid safety regulations of the place of use must be observed.

The gearboxes must be commissioned and maintained in accordance with our operating instructions.
In the case of shaft-mounted gear units with torque arm, the connection of the torque arm to the foundation must must allow the gearbox to be moved at any time in accordance with the displacement of the machine shaft without constraining forces acting on the gearbox. This should also be the case for any coupling provided between the gearbox and the drive motor.

The gearboxes comply with the general requirements of the Machinery Directive. Accordingly, they are classified as „partly completed machinery“ in the sense of Article 2G.

Hydromotors

For the correct operation of the hydraulic motors, please observe the corresponding manufacturer’s instructions.

Electric motor (direct attachment)

Please note that with this mounting variant the motor must be oil-tight and the fixed bearing of the motor bearing must be on the side facing the gearbox.

Type code

A	B	C	D	E	F	G	H	I	J	K	L	M
GP												

Type
Gearbox, planetary

Size

Position input shaft
C: Coaxial
H: Helical
B: Bevel

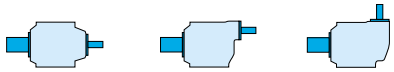

Output (drive)
H: Hollow shaft
S: Solid shaft with parallel key
O: Outer spline
I: Inner spline
A: Application specific

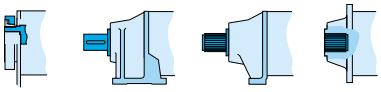

Housing
T: Torque arm
B: Base frame
F: Flange
A: Application specific

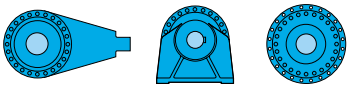

Gear stages

Input motor
E: Electric
H: Hydraulic
A: Application specific

Ratio

Input adaption
S: Solid shaft with parallel key
F: Flange mounted motor or bracket for motor attachment*
P: Piggy pack
A: Application specific

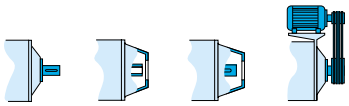

Brake
W: Without brake
B: With brake

Cooling
W: Without
E: External cooling
H: Heating elements
K : Internal cooling chamber

Mounting position
HO: Horizontal
VT: Vertical upwards
VB: Vertical downwards

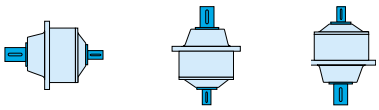

Others
Project specific devices

*for motor attachment with coupling or direct assembling via parallel key

Gearbox selection

Gearbox sizes

Size	Constant output torque $T_{2\ CONST}$ kNm
GP 200	127
GP 300	200
GP 425	284
GP 550	379
GP 615	413
GP 870	579
GP 910	788
GP 1100	849
GP 1400	1,083
GP 1500	1,254

Size	Constant output torque $T_{2\ CONST}$ kNm
GP 2300	1,577
GP 2800	2,016
GP 3100	2,253
GP 3400	2,713
GP 4000	3,119
GP 5400	3,739
GP 5500	4,230
GP 6700	5,030
GP 8000	5,900
GP 10000	7,137

Table 01

Due to the robust design of the ZF planetary gearboxes, torque peaks of up to 2 times of the rated torque are admissible. This allows for an optimized cost effectiveness of the plant.

The gearboxes are designed and tested for the following conditions as standard.

$T_{2\ CONST}$ torque based on	
Bearing lifetime Lh10	Application specific. Calculation on demand.
Output speed	10 rpm
Toothing designed to be durable	

Table 02

Environmental conditions	
Temperature	-20° C … +40° C
Installation height	< 1.000 m
Operation time year / day / hours	365 / 7 / 24
Starts / hour	5

Table 03

For other requirements please contact us.

Gearbox design

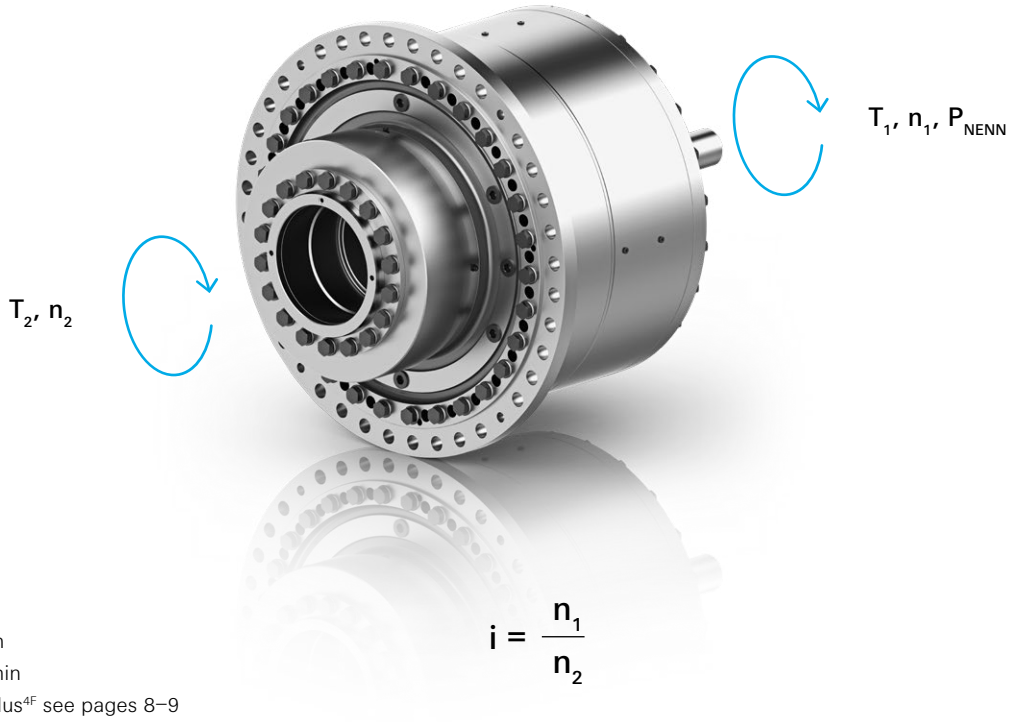

Ratio

i Nominal ratio
n_1 Input speed 1/min
n_2 Output speed 1/min
Possible Ratio at Redulus[4F] see pages 8–9

$$i = \frac{n_1}{n_2}$$

Required output torque $T_{2\ NENN}$

$T_{2\ NENN}$ nominal output torque Nm
P_{NENN} nominal motor power kW

$$T_{2\ NENN} = \frac{P_{NENN} \times 9550}{n_2}$$

Constant output torque $T_{2\ CONST}$

$T_{2\ ERF}$ required output torque Nm
K_A Service factor depending on application. On request.

$$T_{2\ ERF} = T_{2\ NENN} \times K_A$$

Gearbox selection

Selection $T_{2\ CONST}$ see table 01, page 6

$$T_{2\ ERF} < T_{2\ CONST}$$

Additional forces

In case of additional loads on the input and/or output shaft in the form of radial forces and/or axial forces, a check of the shaft and bearing dimensioning is required.

Gearbox ratio

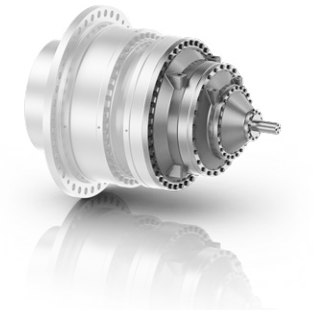

Size	Constant output torque $T_{2\ CONST}$	Basis module 2 planetary stages (PP)					Ratio with planetary pre-stage (PPP)	
	kNm	i					i	
GP 200	127	28	33	37	47	56*	151	179
GP 300	200	28	33	37	47	56*	151	179
GP 425	284	28	33	37	47	56*	151	179
GP 550	379	29	34	37	47	55	154	182
GP 615	413	29	34	37	47	55	154	182
GP 870	579	29	34	37	47	55*	154	182
GP 910	788	29	34	37	47	55	154	182
GP 1100	849	29	34	37	47	55*	154	182
GP 1400	1,083	29	34	37	47	55*	154	182
GP 1500	1,254	29	34	37	47	55*	158	185
GP 2300	1,577	29	34	37	47	55*	158	185
GP 2800	2,016	29	34	37	47	55	158	185
GP 3100	2,253	29	34	37	47	55*	158	185
GP 3400	2,713	29	34	37	47	55*	158	185
GP 4000	3,119	25	29	32	41	46*	135	159
GP 5400	3,739	25	29	32	41	46*	135	159
GP 5500	4,230	25	29	32	41	46*	135	159
GP 6700	5,030	25	29	32	41	46*	135	159
GP 8000	5,900	25	29	32	41	46*	135	159
GP 10000	7,137	25	29	32	41	46*	135	159

Table 04 / Ratio values rounded

* Reduced output torque. Please contact us.

Ratio with planetary pre-stage (PP**P**)							Ratio with helical pre-stage (PP**H** ... PPP**H**)		Ratio with bevel pre-stage (PP**B** ... PPP**B**)	
i							min.	max.	min.	max.
198	211	233	258	300	332	426	48	1,279	54	1,876
198	211	233	258	300	332	426	48	1,279	54	1,876
198	211	233	258	300	332	426	48	1,279	54	1,876
202	214	237	261	305	335	426	49	1,279	55	1,876
202	214	237	261	305	335	426	49	1,279	55	1,876
202	214	237	261	305	335	426	49	1,279	55	1,876
202	214	237	261	305	335	426	49	1,279	55	1,876
202	214	237	261	305	335	426	49	1,279	55	1,876
202	214	237	261	305	335	426	49	1,279	55	1,876
204	218	240	264	305	335	426	49	1,279	55	1,876
204	218	240	264	305	335	426	49	1,279	55	1,876
204	218	240	264	305	335	426	49	1,279	55	1,876
204	218	240	264	305	335	426	49	1,279	55	1,876
204	218	240	264	305	335	426	49	1,279	55	1,876
175	187	206	227	262	288	366	42	1,099	47	1,612
175	187	206	227	262	288	366	42	1,099	47	1,612
175	187	206	227	262	288	366	42	1,099	47	1,612
175	187	206	227	262	288	366	42	1,099	47	1,612
175	187	206	227	262	288	366	42	1,099	47	1,612
175	187	206	227	262	288	366	42	1,099	47	1,612

Ratio values rounded

Redulus^{4F} gearbox dimension

Gearbox dimension for a 2-stage planetary gearbox (PP)

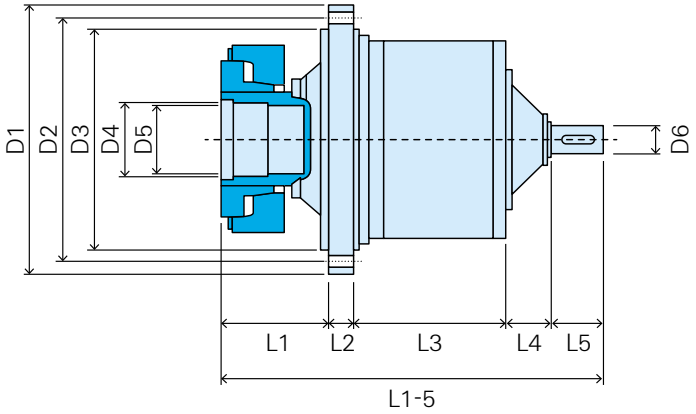

Size	Constant output torque $T_{2\ CONST}$	D1	D2	D3	D4	D5	D6	L1	L2	L3	L4	L5	L1-L5	Weight
	kNm	mm	mm	mm	mm	mm	mm	mm	mm	mm	mm	mm	mm	kg
GP 200	127	715	665	610	205	200	70	235	35	389	270	150	1,074	770
GP 300	200	835	785	715	225	220	70	250	40	437	258	150	1,135	1,170
GP 425	284	920	830	800	265	260	85	285	42	483	314	185	1,309	1,600
GP 550	379	990	925	850	280	270	85	290	45	536	305	185	1,361	2,010
GP 615	413	1,055	990	915	290	280	100	295	47	547	341	210	1,440	2,350
GP 870	579	1,160	1,085	1,000	320	310	100	310	50	591	361	210	1,522	3,070
GP 910	788	1,255	1,170	1,065	380	370	110	345	55	643	365	240	1,648	4,050
GP 1100	849	1,300	1,215	1,115	400	390	110	350	58	668	359	240	1,675	4,350
GP 1400	1,083	1,385	1,285	1,180	450	440	130	375	60	720	421	290	1,866	4,620
GP 1500	1,254	1,430	1,325	1,205	470	460	130	370	65	737	422	290	1,884	4,930
GP 2300	1,577	1,570	1,470	1,350	490	480	150	400	70	792	490	320	2,072	6,200
GP 2800	2,016	1,690	1,580	1,460	560	550	150	420	75	861	495	320	2,171	7,910
GP 3100	2,253	1,790	1,675	1,550	590	580	160	465	80	873	503	340	2,261	9,140
GP 3400	2,713	1,840	1,725	1,600	610	600	160	475	85	923	500	340	2,323	10,660
GP 4000	3,119	1,905	1,780	1,630	630	620	170	471	90	984	482	360	2,387	12,630
GP 5400	3,739	2,045	1,905	1,760	670	660	170	500	93	1,054	477	360	2,484	15,600
GP 5500	4,230	2,105	1,960	1,800	710	700	190	575	95	1,101	544	410	2,725	17,620
GP 6700	5,030	2,255	2,110	1,940	790	780	190	590	100	1,170	539	410	2,809	21,700
GP 8000	5,900	2,395	2,240	2,080	840	830	210	640	110	1,229	637	450	3,066	25,420
GP 10000	7,137	2,515	2,365	2,195	890	880	210	680	125	1,317	631	450	3,203	30,610

Table 05

Redulus^{4F} gearbox dimension

Gearbox dimension for a 3-stage planetary gearbox (PPP)

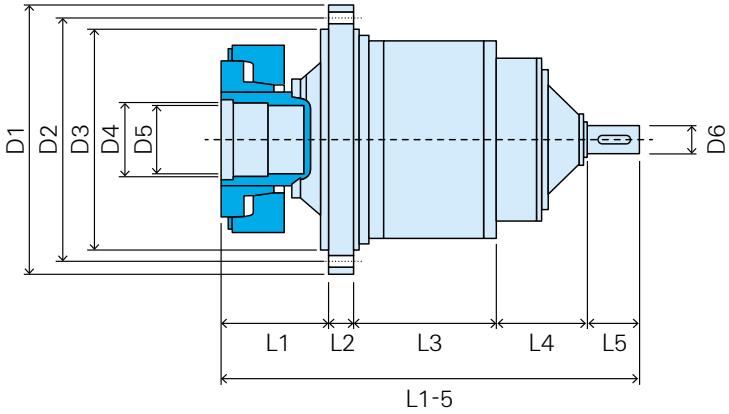

Size	Constant output torque $T_{2\ CONST}$	D1	D2	D3	D4	D5	D6	L1	L2	L3	L4	L5	L1-L5	Weight
	kNm	mm	mm	mm	mm	mm	mm	mm	mm	mm	mm	mm	mm	kg
GP 200	127	715	665	610	205	200	65	235	35	389	409	100	1,163	790
GP 300	200	835	785	715	225	220	65	250	40	437	396	100	1,223	1,200
GP 425	284	920	830	800	265	260	65	285	42	483	425	100	1,335	1,650
GP 550	379	990	925	850	280	270	65	290	45	536	416	100	1,387	2,070
GP 615	413	1,055	990	915	290	280	70	295	47	547	469	150	1,508	2,420
GP 870	579	1,160	1,085	1,000	320	310	70	310	50	591	489	150	1,590	3,160
GP 910	788	1,255	1,170	1,065	380	370	70	345	55	643	502	150	1,695	4,160
GP 1100	849	1,300	1,215	1,115	400	390	70	350	58	668	495	150	1,721	4,480
GP 1400	1,083	1,385	1,285	1,180	450	440	85	375	60	720	598	185	1,938	4,750
GP 1500	1,254	1,430	1,325	1,205	470	460	85	370	65	737	598	185	1,955	5,070
GP 2300	1,577	1,570	1,470	1,350	490	480	110	400	70	792	695	210	2,167	6,380
GP 2800	2,016	1,690	1,580	1,460	560	550	100	420	75	861	701	210	2,267	8,140
GP 3100	2,253	1,790	1,675	1,550	590	580	110	465	80	873	705	240	2,363	9,400
GP 3400	2,713	1,840	1,725	1,600	610	600	110	475	85	923	702	240	2,425	10,960
GP 4000	3,119	1,905	1,780	1,630	630	620	130	471	90	984	745	290	2,580	12,990
GP 5400	3,739	2,045	1,905	1,760	670	660	130	500	93	1054	739	290	2,676	16,040
GP 5500	4,230	2,105	1,960	1,800	710	700	150	575	95	1101	882	320	2,973	18,120
GP 6700	5,030	2,255	2,110	1,940	790	780	150	590	100	1170	877	320	3,057	22,320
GP 8000	5,900	2,395	2,240	2,080	840	830	150	640	110	1229	935	320	3,234	26,140
GP 10000	7,137	2,515	2,365	2,195	890	880	150	680	125	1317	929	320	3,371	31,480

Table 06

Redulus4F gearbox dimension

Gearbox dimension for a 4-stage planetary gearbox (PPPP)

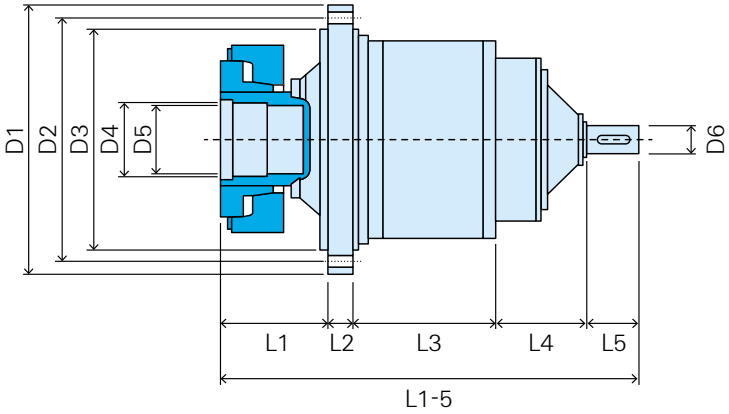

Size	Constant output torque $T_{2\ CONST}$	D1	D2	D3	D4	D5	D6	L1	L2	L3	L4	L5	L1-L5	Weight
	kNm	mm	mm	mm	mm	mm	mm	mm	mm	mm	mm	mm	mm	kg
GP 200	127	715	665	610	205	200	65	235	35	389	–	–	–	810
GP 300	200	835	785	715	225	220	65	250	40	437	–	–	–	1,230
GP 425	284	920	830	800	265	260	65	285	42	483	–	–	–	1,700
GP 550	379	990	925	850	280	270	65	290	45	536	–	–	–	2,130
GP 615	413	1,055	990	915	290	280	70	295	47	547	607	100	2,177	2,490
GP 870	579	1,160	1,085	1,000	320	310	70	310	50	591	627	100	2,347	3,250
GP 910	788	1,255	1,170	1,065	380	370	70	345	55	643	640	100	2,490	4,270
GP 1100	849	1,300	1,215	1,115	400	390	70	350	58	668	634	100	2,584	4,610
GP 1400	1,083	1,385	1,285	1,180	450	440	85	375	60	720	709	100	2,779	4,880
GP 1500	1,254	1,430	1,325	1,205	470	460	85	370	65	737	709	100	2,844	5,210
GP 2300	1,577	1,570	1,470	1,350	490	480	110	400	70	792	823	150	3,253	6,560
GP 2800	2,016	1,690	1,580	1,460	560	550	100	420	75	861	829	150	3,409	8,370
GP 3100	2,253	1,790	1,675	1,550	590	580	110	465	80	873	842	150	3,592	9,660
GP 3400	2,713	1,840	1,725	1,600	610	600	110	475	85	923	839	150	3,699	11,260
GP 4000	3,119	1,905	1,780	1,630	630	620	130	471	90	984	921	185	3,886	13,350
GP 5400	3,739	2,045	1,905	1,760	670	660	130	500	93	1054	916	185	4,111	16,480
GP 5500	4,230	2,105	1,960	1,800	710	700	150	575	95	1101	1,087	210	4,427	18,620
GP 6700	5,030	2,255	2,110	1,940	790	780	150	590	100	1170	1,082	210	4,642	22,940
GP 8000	5,900	2,395	2,240	2,080	840	830	150	640	110	1229	1,141	210	5,001	26,860
GP 10000	7,137	2,515	2,365	2,195	890	880	150	680	125	1317	1,135	210	5,210	32,350

Table 07

Redulus^{4F} gearbox dimension

Gearbox dimension for a 2-stage planetary gearbox with helical pre-stage (PPH)

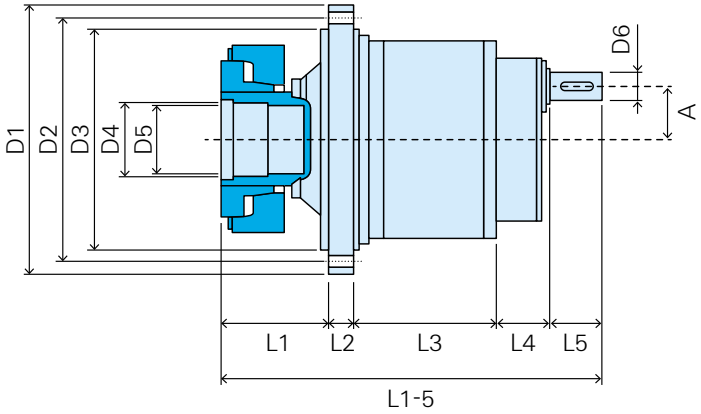

Size	Constant output torque $T_{2\ CONST}$	D1	D2	D3	D4	D5	D6	L1	L2	L3	L4	L5	L1-L5	A	Weight
	kNm	mm	mm	mm	mm	mm	mm	mm	mm	mm	mm	mm	mm	mm	kg
GP 200	127	715	665	610	205	200	65	270	35	389	304	120	1,121	180	920
GP 300	200	835	785	715	225	220	65	285	40	437	304	120	1,151	180	1,290
GP 425	284	920	830	800	265	260	65	334	42	483	304	130	1,244	220	1,730
GP 550	379	990	925	850	280	270	65	336	45	536	304	130	1,305	220	2,050
GP 615	413	1,055	990	915	290	280	70	342	47	547	361	160	1,410	260	2,600
GP 870	579	1,160	1,085	1,000	320	310	70	360	50	591	361	160	1,472	260	3,200
GP 910	788	1,255	1,170	1,065	380	370	70	349	55	643	385	180	1,608	290	4,000
GP 1100	849	1,300	1,215	1,115	400	390	70	384	58	668	380	180	1,636	290	4,600
GP 1400	1,083	1,385	1,285	1,180	450	440	85	405	60	720	441	190	1,786	320	5,100
GP 1500	1,254	1,430	1,325	1,205	470	460	85	401	65	737	445	190	1,807	320	5,400
GP 2300	1,577	1,570	1,470	1,350	490	480	110	431	70	792	521	220	2,003	380	7,200
GP 2800	2,016	1,690	1,580	1,460	560	550	100	475	75	861	521	220	2,097	380	8,700
GP 3100	2,253	1,790	1,675	1,550	590	580	110	470	80	873	571	240	2,229	420	10,500
GP 3400	2,713	1,840	1,725	1,600	610	600	110	507	85	923	575	240	2,298	420	11,700
GP 4000	3,119	1,905	1,780	1,630	630	620	130	503	90	984	705	280	2,530	450	14,500
GP 5400	3,739	2,045	1,905	1,760	670	660	130	576	93	1054	709	280	2,636	450	17,300
GP 5500	4,230	2,105	1,960	1,800	710	700	150	604	95	1101	744	320	2,835	500	20,200
GP 6700	5,030	2,255	2,110	1,940	790	780	150	651	100	1170	748	320	2,928	500	23,300
GP 8000	5,900	2,395	2,240	2,080	840	830	150	677	110	1229	843	340	3,162	580	29,100
GP 10000	7,137	2,515	2,365	2,195	890	880	150	718	125	1317	838	340	3,300	580	34,200

Table 08

Redulus4F gearbox dimension

Gearbox dimension for a 3-stage planetary gearbox with helical pre-stage (PPPH)

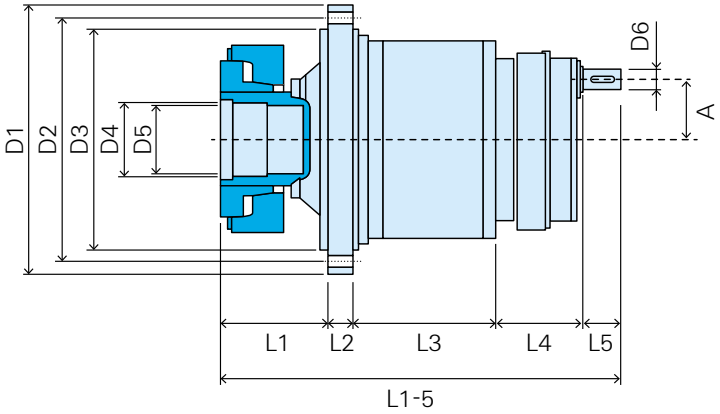

Size	Constant output torque $T_{2\ CONST}$	D1	D2	D3	D4	D5	D6	L1	L2	L3	L4	L5	L1-L5	A	Weight
	kNm	mm	mm	mm	mm	mm	mm	mm	mm	mm	mm	mm	mm	mm	kg
GP 200	127	715	665	610	205	200	65	270	35	389	–	–	–		on request
GP 300	200	835	785	715	225	220	65	285	40	437	–	–	–		on request
GP 425	284	920	830	800	265	260	65	334	42	483	–	–	–		on request
GP 550	379	990	925	850	280	270	65	336	45	536	–	–	–		on request
GP 615	413	1,055	990	915	290	280	70	342	47	547	545	120	665	180	on request
GP 870	579	1,160	1,085	1,000	320	310	70	360	50	591	565	120	685	180	on request
GP 910	788	1,255	1,170	1,065	380	370	70	349	55	643	548	120	668	180	on request
GP 1100	849	1,300	1,215	1,115	400	390	70	384	58	668	541	120	661	180	on request
GP 1400	1,083	1,385	1,285	1,180	450	440	85	405	60	720	597	130	727	220	on request
GP 1500	1,254	1,430	1,325	1,205	470	460	85	401	65	737	598	130	728	220	on request
GP 2300	1,577	1,570	1,470	1,350	490	480	110	431	70	792	695	160	855	260	on request
GP 2800	2,016	1,690	1,580	1,460	560	550	100	475	75	861	701	160	861	260	on request
GP 3100	2,253	1,790	1,675	1,550	590	580	110	470	80	873	721	180	901	290	on request
GP 3400	2,713	1,840	1,725	1,600	600	610	110	507	85	923	722	180	902	290	on request
GP 4000	3,119	1,905	1,780	1,630	630	620	130	503	90	984	765	190	955	320	on request
GP 5400	3,739	2,045	1,905	1,760	670	660	130	576	93	1054	759	190	949	320	on request
GP 5500	4,230	2,105	1,960	1,800	710	700	150	604	95	1101	913	220	1,133	380	on request
GP 6700	5,030	2,255	2,110	1,940	790	780	150	651	100	1170	908	220	1,128	380	on request
GP 8000	5,900	2,395	2,240	2,080	840	830	150	677	110	1229	991	220	1,211	380	on request
GP 10000	7,137	2,515	2,365	2,195	890	880	150	718	125	1317	955	220	1,175	380	on request

Table 09

Redulus^{4F} gearbox dimension

Gearbox dimension for a 2-stage planetary gearbox with bevel pre-stage (PPB)

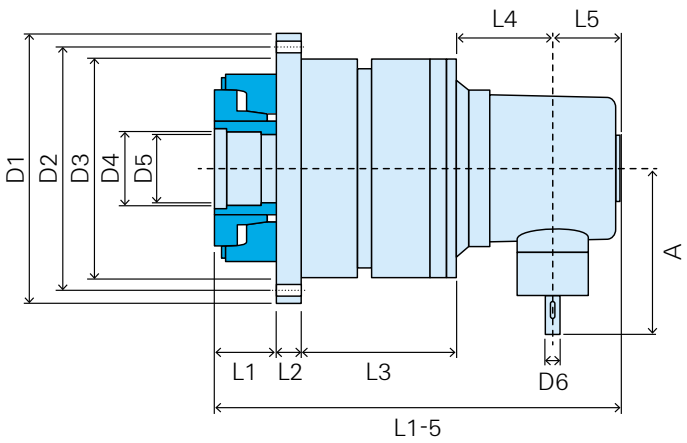

Size	Constant output torque $T_{2\ CONST}$	D1	D2	D3	D4	D5	D6	L1	L2	L3	L4	L5	L1-L5	A	Weight
	kNm	mm	mm	mm	mm	mm	mm	mm	mm	mm	mm	mm	mm	mm	kg
GP 200	127	715	665	610	205	200	65	235	35	384			on request		
GP 300	200	835	785	715	225	220	65	250	40	437			on request		
GP 425	284	920	830	800	265	260	65	285	42	483			on request		
GP 550	379	990	925	850	280	270	65	290	45	536			on request		
GP 615	413	1,055	990	915	290	280	70	295	47	547			on request		
GP 870	579	1,160	1,085	1,000	320	310	70	310	50	591			on request		
GP 910	788	1,255	1,170	1,065	380	370	70	345	55	643			on request		
GP 1100	849	1,300	1,215	1,115	400	390	70	350	58	668			on request		
GP 1400	1,083	1,385	1,285	1,180	450	440	85	375	60	720			on request		
GP 1500	1,254	1,430	1,325	1,205	470	460	85	370	65	737			on request		
GP 2300	1,577	1,570	1,470	1,350	490	480	110	400	70	792			on request		
GP 2800	2,016	1,690	1,580	1,460	560	550	100	420	75	861			on request		
GP 3100	2,253	1,790	1,675	1,550	590	580	110	465	80	873			on request		
GP 3400	2,713	1,840	1,725	1,600	600	610	110	475	85	923			on request		
GP 4000	3,119	1,905	1,780	1,630	630	620	130	471	90	984			on request		
GP 5400	3,739	2,045	1,905	1,760	670	660	130	500	93	1,054			on request		
GP 5500	4,230	2,105	1,960	1,800	710	700	150	575	95	1,101			on request		
GP 6700	5,030	2,255	2,110	1,940	790	780	150	590	100	1,170			on request		
GP 8000	5,900	2,395	2,240	2,080	840	830	150	640	110	1,229			on request		
GP 10000	7,137	2,515	2,365	2,195	890	880	150	680	125	1,317			on request		

Table 10

Redulus4F customer interface

Output side shrink disk

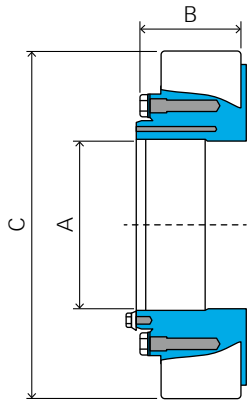

Size	Constant output torque $T_{2\ CONST}$	A	B	C	Weight
	kNm	mm	mm	mm	kg
GP 200	127	200	137	430	100
GP 300	200	220	149	460	126
GP 425	284	260	171	570	234
GP 550	379	270	179	580	240
GP 615	413	280	179	590	249
GP 870	579	310	190	650	325
GP 910	788	350	222	745	376
GP 1100	849	370	225	790	476
GP 1400	1,083	390	243	890	680
GP 1500	1,254	440	244	920	710
GP 2300	1,577	460	268	960	830
GP 2800	2,016	480	288	1,060	1,120
GP 3100	2,253	550	314	1,140	1,320
GP 3400	2,713	580	326	1,160	1,395
GP 4000	3,119	610	321	1,200	1,540
GP 5400	3,739	620	345	1,270	1,835
GP 5500	4,230	660	377	1,340	2,154
GP 6700	5,030	700	392	1,450	2,752
GP 8000	5,900	780	444	1,510	3,045
GP 10000	7,137	830	467	1,530	2,942

Table 11

Inner spline according to DIN 5480

Outer spline according to DIN 5480

Solid shaft with parallel key

Dimension on request.
Special designs
according to customer
requirements are possible.

Accessories for Redulus^{4F}

Version with gear motor

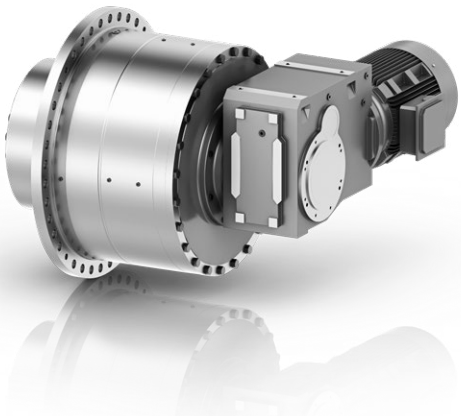

Size	Constant output torque $T_{2\ CONST}$	Ratio i	
	kNm	min.	max
GP 200	127	100	4,000
GP 300	200	100	4,000
GP 425	284	100	4,000
GP 550	379	100	4,000
GP 615	413	100	4,000
GP 870	579	100	4,000
GP 910	788	100	4,000

Table 12

Version with worm gear drive

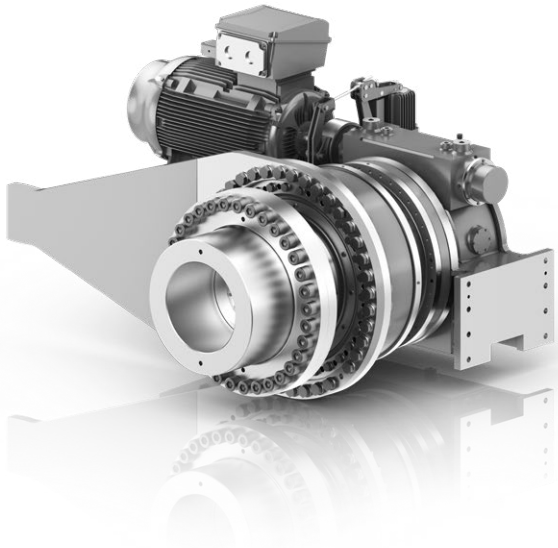

Torque support one-sided

Torque support double-sided

Foot frame

Torque system

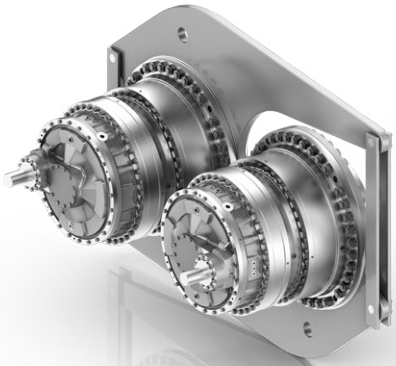

Dimension of torque supports and other versions on request.

Application specific design

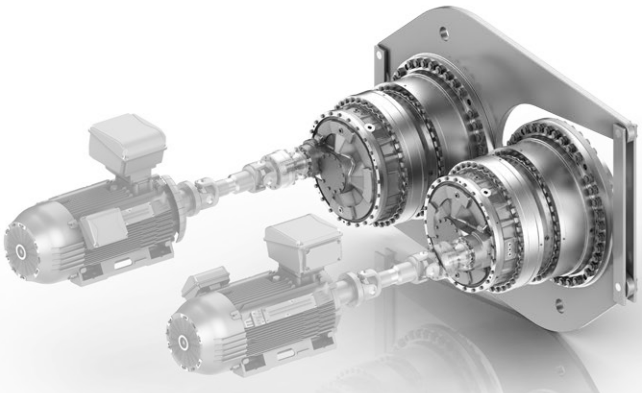

on request

Special designs according to customer requirements are possible.

Further accessories (couplings, cardan shafts, motor lantern, motor) on request.

Customer specification stationary gears

In order to work out a quotation for your application, we kindly ask you to fill out this spec sheet.

Please send your inquiry to
sales.ii@zf.com

Company:

Name/Dept.:

Location/City:

Phone:

E-mail:

Date:

Operating data / conditions

Working machine type _____

Application/branch _____

Application factor _____

Location/country _____

Temperature [°C] min. _____ max. _____

Height at location [m] _____

Sourrounding environment
- small hall (vL <1.25 m/s) ☐
- large hall (vL 2.35...3.82 m/s) ☐
- outside (vL > 3.83 m/s) ☐

Environmental conditions
- normal ☐ dusty ☐ wet ☐
- corrosion ☐ very dusty ☐

ATEX required yes ☐ no ☐ Kat. _____

Humidity [%] _____

Operation [hrs/day; days/week] _____

starts [per hour; per day] _____

Start temperature (...w/o load) _____

Starting torque [kNm] _____

Peak loads per h _____

No. of gearboxes per machine _____

Remarks

Gearbox

Installed motor power / required power [kW] _____

Motor speed input n_1 [1/min] min. _____ nom. _____ max. _____

Design input coaxial ☐ helical ☐ bevel (90°) ☐

Customer ratio i _____

Construction kit Ratio $i_{construction\ kit}$ _____

Output speed n_2 [1/min] min. _____ nom. _____ max. _____

Output torque T_2 [kNm] min. _____ nom. _____ max. _____

Static max. torque [kNm] _____

Min L_{h10} (Bearing lifetime) [h] based on necessary torque _____

Modified calculation allowed? yes, acc. to ISO / TS 16281 ☐ no ☐

Toothing safety factor referring to: ISO 6336 at K_A 1.0 ZF standard ☐

Different safety factors S_H _____ S_F _____

Toothing durable according to DIN 3990 yes ☐ no ☐ → gearbox lifetime [h] _____

Assembly or sensors yes ☐ no ☐ type _____

Installed position horizontal ☐ output top ☐ output bottom ☐

Corrosion resistance requirements C2 ☐ C3 (standard) ☐ other _____

Radial forces at output / input

Transverse forces (**output**) radial F_{R2} [N] _____

Transverse forces (**output**) axial F_{A2} [N] _____

Distance shaft collar → force application **output** [mm] _____

Transverse forces (**input**) radial F_{R1} [N] _____

Distance shaft collar → force application **input** [mm] _____

Remarks

Load spectrum

Load case	Output speed n_2 [1/min]	Output torque T_2 [kNm]	Time slice [%]
1			
2			
3			
4			
5			
6			
7			

Design output shaft

Remarks

Hollow shaft incl. shrink disk	yes ☐	no ☐	hydr. ☐	mech. ☐
Protection cover fixed on gearbox	yes ☐	no ☐		
Shaft with key	yes ☐	no ☐		
Splined shaft DIN 5480 external	yes ☐	no ☐		
Gear hub (internal) DIN 5480	yes ☐	no ☐		
Customer specific	_____			

Design input shaft

Remarks

ZF-Standard: Shaft with key	yes ☐	no ☐
Motor lantern	yes ☐	no ☐
Motor bracket design	yes ☐	no ☐
Piggy back	yes ☐	no ☐
Customer specific	_____	

Accessories / equipment

Remarks

Torque arm

Scope of delivery ZF yes ☐ no ☐

One-sided	_____
Double-sided	_____
Chun	_____
Torsion shaft	_____
FLS	_____
Foot design	_____
Customer specific	_____

Electric motor

Scope of delivery ZF yes ☐ no ☐

No. of motors in drive train _____

Motor type AC ☐ DC ☐ Servo ☐ other ☐

Installed motor power [kW] _____

Required power [kW] _____

Input torque T_1 [kNm] _____

Moment of inertia [kgm²] _____

Voltage [V] _____

Frequency [Hz] _____

Power supply 3-phased ☐ 1-phased ☐

Frequency converter control yes ☐ no ☐

Characteristics 50 Hz ☐ 87 Hz ☐ other _____

Speed n_1 [1/min] min. _____ nom. _____ max. _____

Motor execution
(ZF standard IEC3) IEC ☐ NEMA ☐

Motor design B3 (Foot) ☐ B5 (Flange) ☐ other _____

Rotation direction (under load) Clockwise ☐ counter clockw. ☐ both ☐

Protection class IP: _____

Operating mode Permanent (S1) ☐ intermittent ☐

National laws (z.B. UL/CSA) _____

Hydraulic motor

Scope of delivery ZF yes ☐ no ☐

Supplier/type code _____

$V_{g\,max}$ [cm³] _____

$V_{g\,min}$ [cm³] _____

Dp [bar] _____

Q_{max} [l/min] _____

Accessories / equipment

Remarks

Cooling/Heating

	Scope of delivery ZF yes ☐ no ☐
Execution	int. cooling ☐ ext. cooling ☐ heating element ☐
Cooling-/heating power [kW]	_____
Heating elements	if yes: amount _____ voltage _____
Vent	allowed ☐ not allowed ☐
External cooler	oil/air ☐ oil/water ☐
External oil/water cooler	_____
Cooling water temperature [°C]	_____
Additives in cooling water	ZF Standard: corrosion protection, other: _____
Filterfineness [µm]	ZF Standard: Single filter 25 µm, other: _____
Execution: (ZF Standard: w/o oilpan, roof, frame)	_____
Output voltage sensors	ZF Standard: _____
Corrosion protection / paint	C2 ☐ C3 (standard) ☐ other: _____
National laws (f.e. UL/CSA)	_____
Specific color (ZF Standard RAL 5003)	_____
Terminal box	required ☐ wiring done by ZF ☐

Safety clutch

	Scope of delivery ZF yes ☐ no ☐
based on	engine power ☐ required power ☐
Safety factor for equipment	_____
Type	mechanic ☐ hydraulic ☐ other: _____
Flange-/shaft connection (drive shaft)	_____
Flange-/shaft connection (engine side)	_____
Axial offset D W_a	_____
Radial offset D W_r	_____
Angular offset D W_w	_____
Protective cover	_____

Cardan shaft

Scope of delivery ZF yes ☐ no ☐

Safety factor for equipment _____

Installation length mm (L_i) _____

Cardan shaft extension (L_a) _____

Bending angle (standard 3°) _____

Bearing lifetime Lh_{10} _____

Flange diameter _____

Interface motorshaft (standard: DIN flange) _____

Interface inputshaft (standard: DIN flange) _____

Screw set (standard: not scope of delivery ZF) _____

Protective cover / painting _____

Brake/backstops

Scope of delivery ZF yes ☐ no ☐

Design disk ☐ drum ☐ multi-disk ☐

Type dynamic brake ☐ parking brake ☐

Medium hydraulic ☐ electric ☐

Nom. brake torque [Nm] _____

Nom. brake voltage [V] _____

Holding pressure [bar] _____

Ventilate pressure [bar] _____

Elastic coupling/clutch

	#1 Scope of delivery ZF yes ☐ no ☐	**#2** Scope of delivery ZF yes ☐ no ☐
Safety factor for equipment		
Type		
Flange-/shaft interface diam.		
Flange-/shaft interface diam.		
Axial offset D W_a [mm]		
Radial offset D W_r [mm]		
Angular offset D W_w [°]		
Moment of inertia [kgm²]		
Flywheel effect [kgm²]		

Dokumentation (technical manual is standard)

Languages (standard DE/EN) others: _____

Material specification 3.1 ☐ 3.2 ☐ other _____

Special requirements/laws for application in installation country? _____

Assembly instructions* _____

Installation declaration* _____

Safety signage ISO ☐ ANSI ☐ other _____

Medium Paper ☐ PDF ☐ other _____

Number _____

* only for product classification; Incomplete machinery within the meaning of Article 2G EU area only

Transport / packaging

ZF standard: wood-frame other: _____

Packaging for type of transport (e.g. sea) _____

Incoterms (standard FCA) _____

Is installation position = transport position HO ☐ VT ☐ VB ☐

General information

Estimated number of gearboxes per year _____

Color (standard: RAL 5003 sapphire blue) _____

Delivery date: Prototype/Serial start _____

Are there any legal requirements and/or other standards to be considered?

yes ☐ no ☐ if yes, please specify _____

_____

Further requirements (e.g. application details, customer drawings, type plate, limiting dimensions, noise and vibration requirements …): Please add on a separate sheet of paper.

Additional product portfolio

Travel drive gearboxes

- Planetary gearboxes
  GPT/GFA
  Technical documentation
  ZF 77110

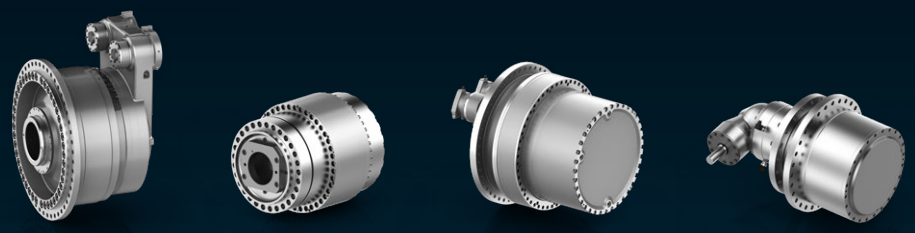

Swing gearboxes

- Planetary gearboxes
  GFB
  Technical documentation
  ZF 77201

Pump distribution gearboxes

- GFC
  Technical documentation
  ZF 77301

Winch gearboxes

- Planetary gearboxes
  GPT-W
  Technical documentation
  ZF 77502

ZF Group
Division Industrial Technology
Product Line Industrial Drives
Mannesmannstrasse 29
58455 Witten
Germany

Phone +49 2302 877-0
sales.ii@zf.com
www.zf.com/industrialgearboxes

twitter.com/zf_group
facebook.com/zfgroup.global
youtube.com/zffriedrichshafenag
linkedin.com/company/zf-group
instagram.com/zf_group

ZE76121 TDI 01.2024