Sustainable Solutions for Buses

Systems Expertise for the Future of Public Transport

Table of Contents

ZF Commercial Vehicles Solutions: Mobilizing Commercial Vehicle Intelligence

With decades of experience in transmission, braking and steering technology, we know how important road safety and driver comfort are to our industry.

ZF provides the capability to shape the future of commercial transportation systems. Our technologies and services for commercial vehicles and fleets make them more efficient, safe, connected, intelligent and automated wherever they operate. We partner with customers to introduce integrated and innovative solutions that positively impact the commercial vehicle's lifecycle, from cradle to grave.

We offer customers access to the broadest range of commercial vehicle solutions in key domains like Automated Driving, Electric Mobility, Shared Transportation and Fleet Operations' Digitalization to enable Next Generation Mobility. NOW.

CeTrax 2

E-Drive for conventional driveline concepts

Buses are supposed to be fast and efficient but also cost-effective and low-emission at the same time. Bus operators need solutions to electrify existing fleets. For conventional driveline arrangements, ZF offers the electric central drive CeTrax 2.

Torque-weight ratio
(system) Nm/kg

64.2

The second generation of CeTrax is a purely electric central drive designed specifically for heavy electric commercial vehicles such as articulated buses, coaches and trucks. When installed in battery-driven vehicles, the system operates with zero local emissions!

The focus is on manufacturers that want to integrate an electric drive into their existing conventional vehicle platforms. Bus manufacturers benefit from the option of using the system for both low-entry and high-floor applications.

CeTrax 2 cuts costs and reduces the time and effort involved in technical integration as well as in service.

With a maximum power output of up to 360 kW and a maximum torque of 24,700 Nm, CeTrax 2 beats con-

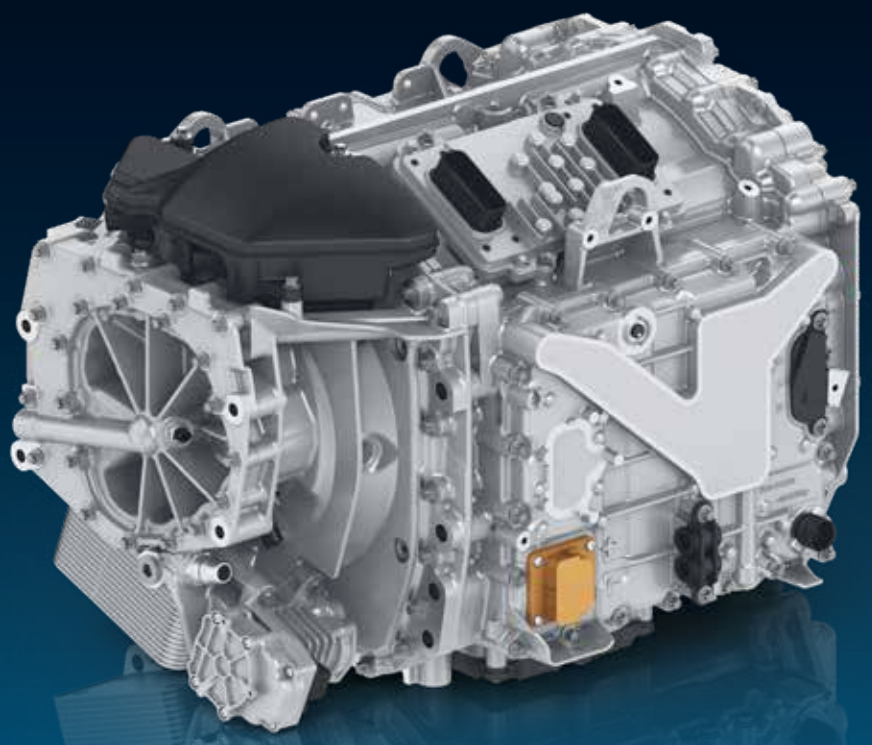

ventional drives in terms of performance and lets even heavy vehicles climb the steepest grades.

Another highlight is the integrated multi-stage transmission that enables high vehicle speeds at low engine speeds. It can be shifted under load and without tractive force interruption. With compact dimensions and a low weight, CeTrax 2 allows the use of standard axles with common ratios.

Since key components such as the electric motor, inverter, transmission stage and accompanying software were developed at ZF and integrated in a single shared housing, they are optimally tuned to each other and do not require any additional HV cables.
The system's high efficiency contributes to expanding the vehicle's electric range.

Advantages at a glance

- High electrical efficiency
- Small dimensions and few external interfaces
- High peak and continuous power through liquid cooling
- Integrated ZF system including electric motor, inverter, electronics and software
- Combinable with common drive axles and ratios
- Extended battery life and electric range
- Integrable into other vehicle systems (braking system, ADAS and automated driving functions)

AxTrax AVE

For clean cities

ZF offers future-proof system solutions for public transport. Worldwide, more than 2,200 electric buses have already traveled around 150 million kilometers with AxTrax AVE.

The AxTrax AVE electric portal axle with an integrated near-wheel drive is the solution for electric buses, hybrid buses and trolleybuses. Purely electric, zero-emission driving is possible both in solo and articulated buses.

Each wheel is driven by a compact, high-torque electric motor to keep the axle weight including the integrated motors low. The vehicle is lighter and the system requires less space because there is no conventional drive and no propshaft. The additional space allows for innovative interior designs with comfortable seating and standing for passengers in the entire bus. They also get on and off faster. Of course, the extra space can also be used for batteries.

No special wheel components are required with the AxTrax AVE. The same tire-rim combinations and standard disc brakes as in normal buses can be used. The brakes are fitted in the same easy-to-service position as with the standard axles.

The ZF system: AxTrax AVE, the inverter and the ZF EST 54 control unit form the basis for the systematic interplay of power request, recuperation and energy storage. As a result, vehicle manufacturers receive an ideally tuned system package.

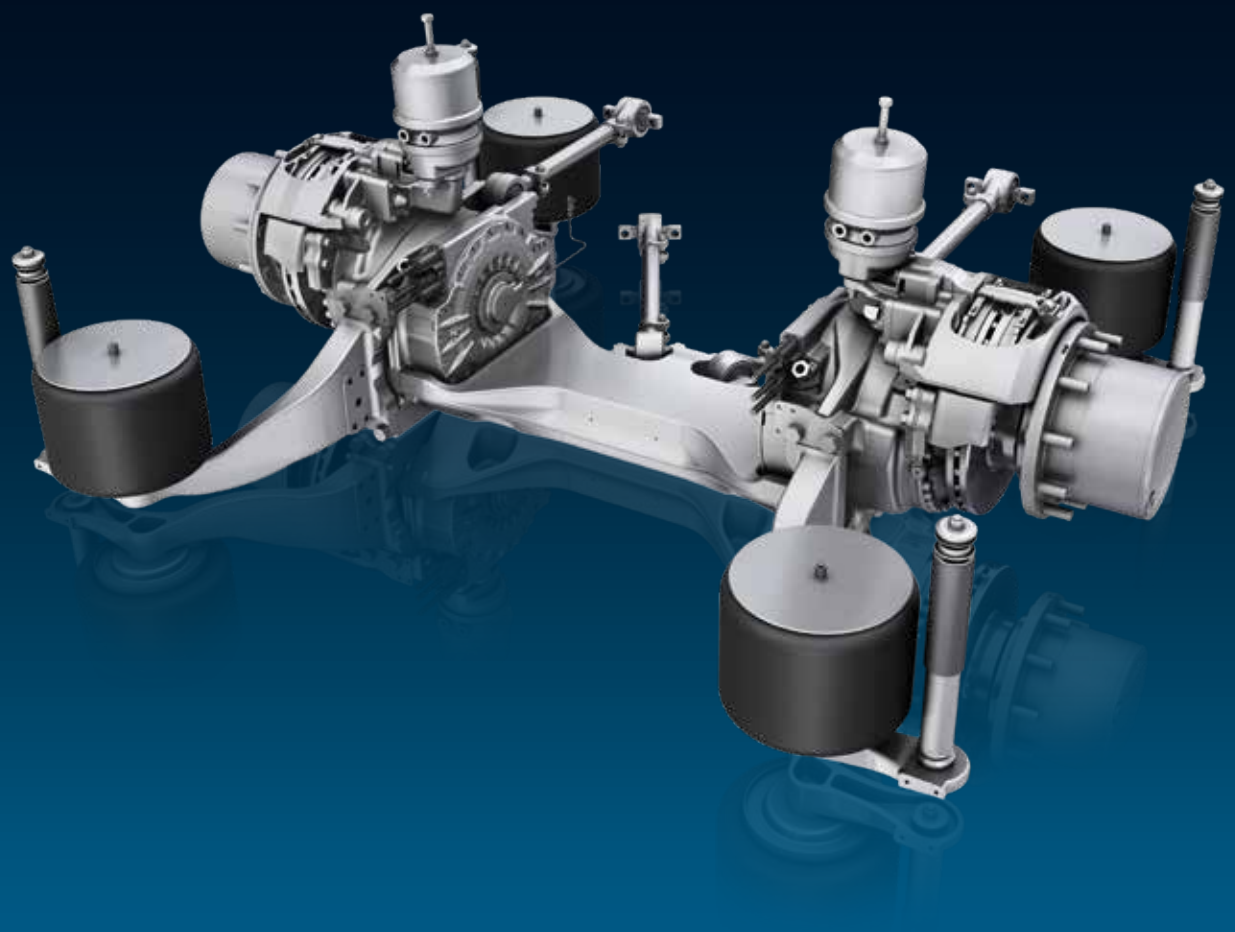

Advantages at a glance

- Developed for demanding city bus applications
- Driveline designs: hybrid, fully electric (fuel cell or battery) and trolley line
- Compatible with the low-floor axles AV 133 and AVN 132
- Opens up innovative passenger compartment design options and new bus concepts
- High peak and continuous power through liquid cooling
- High torque-mass ratio
- Suitable for all-wheel drives

Climbing ability
19-ton solobus, up to

23%

PowerLine

Powershift transmission for school and midibuses

The fully automatic PowerLine transmission reduces the driver's workload by safely engaging the most powerful gear during overtaking maneuvers, providing intelligent driving assistance, skipping gears and through its sprinting capability and fuel savings in the double-digit range.

Advantages at a Glance

- Up to 10 percent more fuel efficiency thanks to intelligent powershifts
- Benchmark in its class for power-to-weight ratio - high torque with low weight
- 30 percent faster shift times compared to automated 6-speed transmissions
- Optimal shifting comfort at car level thanks to automatic powershifting
- Adaptive shift strategy with many driving functions as standard or as an additional option

With its 900 Nm input torque, PowerLine is specifically designed for medium-duty vehicles and delivers excellent results, whether for trucks, heavy pickup trucks or buses. To implement this, ZF relies on the million-fold tried-and-tested 8-speed planetary gearset concept from the passenger car sector. For this vehicle segment, PowerLine has a higher gear ratio spread than any other transmission in the market. Gear steps across several gears at once are also possible.

Short shifting times between the eight gear steps guarantee a high degree of dynamics.

The intelligent electronics and non-wearing torque converter achieve double digit fuel savings. The integrated twin torsional damper reduces vibrations, making driving quieter and significantly increasing driving comfort.
In addition, the intelligent transmission control provides a wide spectrum of driving functions, such as hill start aid and a start/stop function.

PowerLine is designed for a B10 service life of 400,000 kilometers at 5.7 million gear shifts.

EcoLife CoachLine

The automatic transmission for coaches

Hilly roads, narrow curves, high altitudes with reduced engine output, back to intercity or city traffic. Stop and Go. Slow driving. Frequent braking and acceleration. For this mix, ZF has developed the new, independent product family EcoLife CoachLine especially for coaches – for engines between 1,200 and 2,800 Nm.

Based on the second generation of EcoLife, CoachLine guarantees high average speed at the lowest engine speeds – now also in top high-performance coaches with up to 2,800 Nm in combination with longer axle ratios. The engine always brings its full torque to the road – without tractive force interruption and without loss of speed when changing gears.
Optimum fuel consumption is guaranteed by the TopoDyn Life driving program, choosing every time the correct shift strategy, based on topography and driving resistance.
The primary retarder delivers maximum deceleration almost until it reaches a standstill. The oil quantity is larger than in the city bus version and allows oil change intervals up to 480,000 kilometers, depending on the OEM.

Developed for harsh requirements
The torque converter with the reinforced, standard torsional damper is even more powerful than its predecessor. It is designed to handle up to 2,800 Nm of engine torque, and the engine can run at low speeds. This enables slow maneuvering without clutch wear.
The torque converter lock-up clutch significantly helps cut fuel consumption. After a short start-off phase, the transmission works purely mechanically, which guarantees maximum energy efficiency.

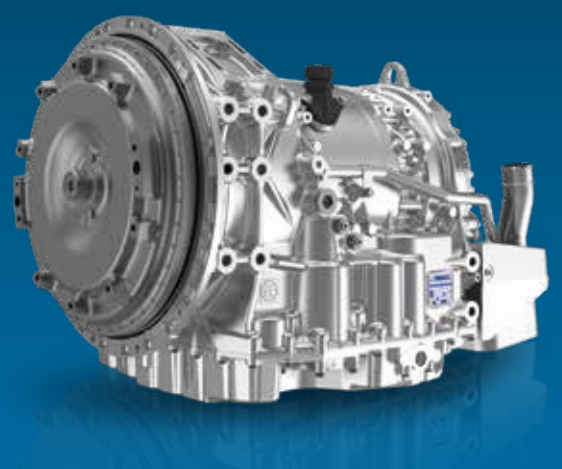

Advantages at a Glance

- 8 different transmission types for engines from 1,200 to 2,800 Nm
- Gear changes without tractive force interruption, on uphill gradients just as in the city center
- TopoDyn Life – driving resistance-dependent shift control
- Reliable braking even on long downhill gradients, thanks to the integrated primary retarder and dual cooling concept
- Increased retarder heat exchanger

Collision Mitigation System for City Buses

Active braking support

The Industry´s first OE-independent CMS solution specifically engenieered for city buses operated in complex urban environments serves the increasing safety demands of the public transport sector.

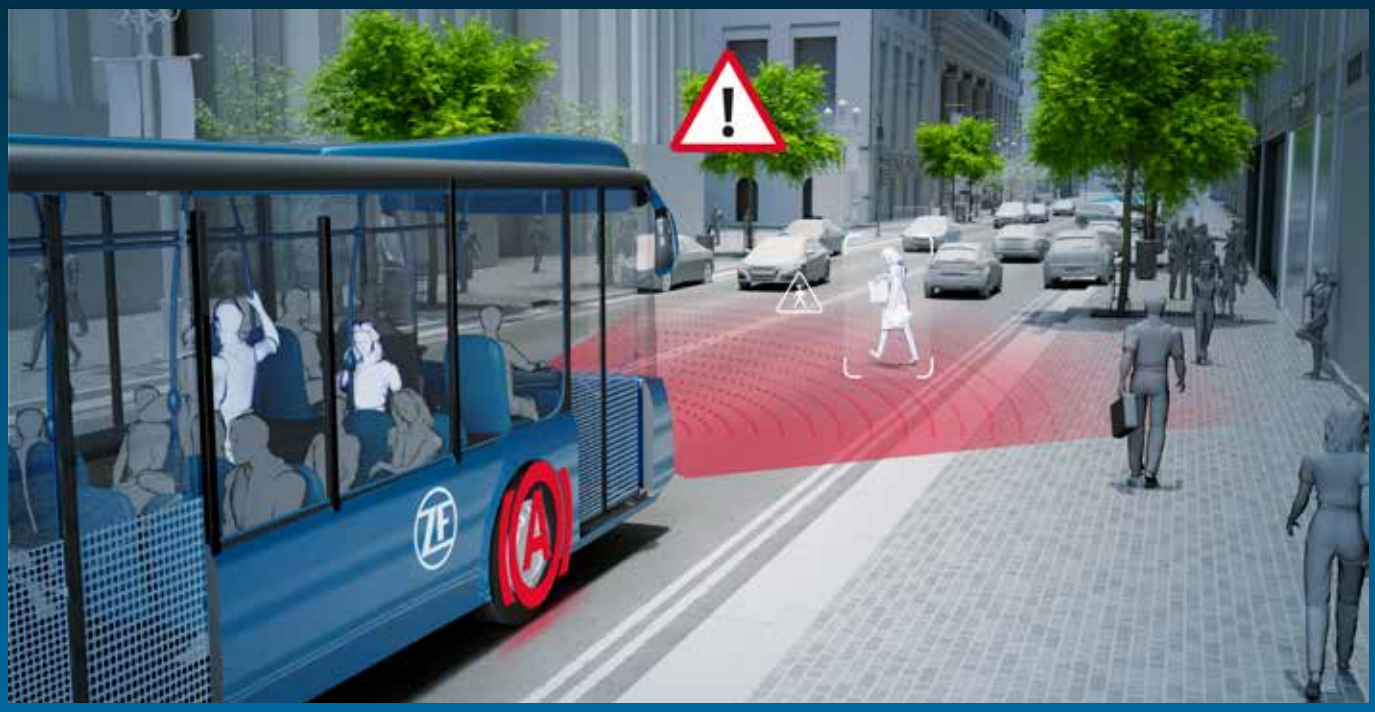

Advantages at a Glance

- Enables adding Collision Mitigation System functionality to city bus applications
- Helps to increase safety for unprotected road users as well as for passengers on the bus
- System´s algorithm benefits from ZF´s extensive on-road experience
- Supports city bus drivers to manage dangerous, complex driving situations
- Serves the increasing safety demands of the public transport sector

The system can actively respond to vehicles, bicyclists, and pedestrians in or entering the path of the vehicle to help avoid or mitigate impending collisions, while protecting unsecured bus passengers.

The Collision Mitigation System (CMS) is designed to monitor a variety of objects in or entering the path of the vehicle, including vehicles, bicyclists, and pedestrians. If an impending collision is detected, the system can issue a Forward Collision Warning and automatically apply the brakes. It helps to avoid or mitigate the impending collision, while supporting unsecured bus passengers. Because it builds on OnGuardMAX system, it is offering a performance tailored to city bus applications. CMS is applicable to electric and integrated combustion engine city buses.

Continuous Damping Control CDC combined with OptiRide

More comfort and safety for the driver

CDC is a damping control system for buses that combines uncompromising comfort and driving safety. Especially in electric driven buses with batteries on the roof it prevents dangerous dynamic pitching while combining vehicle stability with passenger comfort. CDC permanently monitors all relevant influences on the driving situation and sets optimally damping force within a few milliseconds. In this way comfort is maximized and stability is achieved if necessary.

OptiRide Electronically Controlled Air Suspension offers value-adding functions improving safety and comfort for passengers. It improves operational efficiency, vehicle handling and comfort through superior suspension quality and remote-controlled chassis height adjustments. The ZF' suspension control solution helps to increase passenger and driver safety, enhancing vehicle stability through mitigation of excessive pitching and rolling, while also improving comfort through better ride quality and effortless entry and exit. A broad variety of value-adding functionalities enable fleets to bring their daily operations to a whole new level.

Advantages at a Glance: CDC

- Stability even in critical driving situations
- Safe handling during dynamic driving maneuvers
- Comfort for driver and passengers
- Reduced vehicle wear

Advantages at a Glance: OptiRide

- Optimizes the chassis height on air-suspended axles
- Ensures automatic return-to-ride height
- Improves handling through enhanced suspension quality
- Offers memory levels for easier height adjustment

Product overview

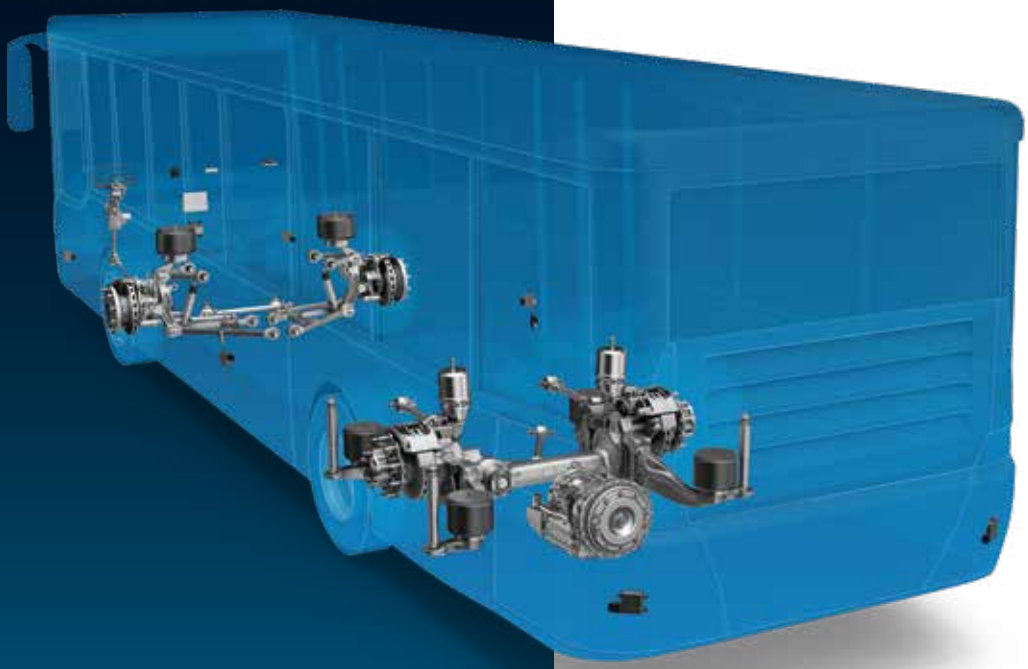

Further highlight products

EcoLife 2: The second generation of the successful automatic transmission in city buses convinces with a corrosion-resistant stainless steel heat exchanger, a weight-optimized converter, and a new torsional damper which enables lower connection speeds. Together with new software functions, EcoLife 2 thus saves up to 3 percent fuel compared to its predecessor.

Traxon Coach: Comfort and reduced fuel consumption, less weight and more performance, a longer service life and less maintenance – with the TraXon automatic transmission system we are on our way towards achieving a new standard of efficiency.

AV 133: ZF portal axles provide continuous step-free passenger areas with no raised platforms. Faster boarding and alighting of passengers and shorter stop times support higher average speeds. This means that more passengers can be transported each day.

A 133: As successor to the established rear axle system A 132, the A 133 offers a direct-speed ratio which enables a significant reduction in fuel consumption in modern drivelines. Optimizations in differentials, bearings, and ground bevel gear set increase service life again, improve efficiency and quiet running.

ReAX: Adaptive steering technology utilizes market leading automotive electric steering technology to optimize steering performance in commercial vehicles. This system adapts to signals from the vehicle and analyzes driver input to provide smoother, more precise steering, helping to improve performance and reduce driver fatigue.

EPHS: Electrically Powered Hydraulic Steering Pump allows flexibility in vehicle design. EPHS can be used within current vehicle architecture to provide hydraulic power steering in vehicles with hybrid and engine off operations or full electric powertrains.

ADAS/GSR package: With its extensive product portfolio of advanced braking and steering technologies, smart data integration, AI-capable ECU, precise sensors and more, ZF can provide OEMs with scalable approaches to fulfilling the GSR requirements, which will be mandatory for new vehicle homologations. Starting in July 2022, and for new vehicle registrations starting in July 2024.

ADOPT: (Autonomous Driving Open Platform Technology) translates driving instructions from Virtual Driver applications (Autonomous Driving Artificial Intelligence) to real vehicle motion commands by enabling the control of all the relevant vehicle actuation systems. The resulting vehicle motion control is executed under safety and efficiency principles benefiting from ZF´s industry leading experience in vehicle dynamics and powertrain control.

MAXX 2.0: The latest generation of single-piston ADB has been developed based on more than 20 years of engineering and manufacturing expertise. The new design offers up to 40% fewer parts which reduces complexity and can lead to faster, easier maintenance. With less weight and low drag-torque design, it also increases fuel efficiency and payload. The unique adjuster mechanism quickly adapts running clearance during both brake application and brake release to help ensure optimal brake performance.

OnHand (EPH): Building on decades of experience in engineering and manufacturing industry-leading mechatronic systems, OnHand replaces the conventional parking brake with an innovative, compact mechatronic device and a unique hand control unit. With its variety of differentiating value-adding functionalities, the system does not only contribute to improved vehicle safety, but also comes as building block technology towards autonomous driving.

EBS Electronic braking system: This advanced brake control technology transfers the driver's deceleration request electronically to all braking system components to shorten response time, balance brake forces and provide efficient brake management between service and endurance brakes. With exceptional brake performance this market-leading Electronic Braking System (EBS) provides the full range of brake control functions for tough commercial vehicle applications.

MTS: ZF's electronic Modular Door Control system offers safety features for different bus variants in compliance with the latest Western European legislation requirements. It can be applied to a variety of doors, such as inward and outward swinging doors with or without lifting locks, and hinged sliding doors.

2-stage cluth air compressor: The ZF air compressor clutch ensures a reduction in fuel consumption by engaging and disengaging the compressor according to the actual demand, thus also reducing CO^2 emission.

For more information
about our products see here:

The ZF Group

Groundbreaking technologies for future mobility.

ZF is a global technology company supplying systems for passenger cars, commercial vehicles and industrial technology, enabling the next generation of mobility. ZF allows vehicles to see, think and act.
In the four technology domains of Vehicle Motion Control, Integrated Safety, Automated Driving, and Electric Mobility, ZF offers comprehensive product and software solutions for established vehicle manufacturers and newly emerging transport and mobility service providers.

ZF electrifies a wide range of vehicle types. With its products, the company contributes to reducing emissions, protecting the climate and enhancing safe mobility.

With some 157,500 employees worldwide, ZF reported sales of €38.3 billion in fiscal 2021. The company operates 188 production locations in 31 countries.

About Commercial Vehicle Solutions Division

ZF's Commercial Vehicle Solutions (CVS) division is helping shape the future of commercial transportation ecosystems. Our mission is to be the preferred global technology partner to the commercial vehicle industry. Powerfully combining ZF's commercial vehicle systems expertise, extensive technology portfolio and global operations, the division serves the full commercial vehicle industry value chain.

As the automotive industry progresses towards an increasingly autonomous, connected, and electrified (ACE) future, ZF's CVS division innovates, integrates and supplies components and advanced control systems that help make commercial vehicles and fleets operate more safely and sustainably.

CVS unites ZF's former Commercial Vehicle Technology and Commercial Vehicle Control Systems divisions, the latter being formed following ZF's acquisition of WABCO in Spring 2020."

For further information, please visit: **www.zf.com**


ZF

ZF Friedrichshafen AG
Commercial Vehicle Solutions Division
88038 Friedrichshafen
Germany

Phone +49 7541 77-0
zf.com

EN 0000 762 193 - 2023-02